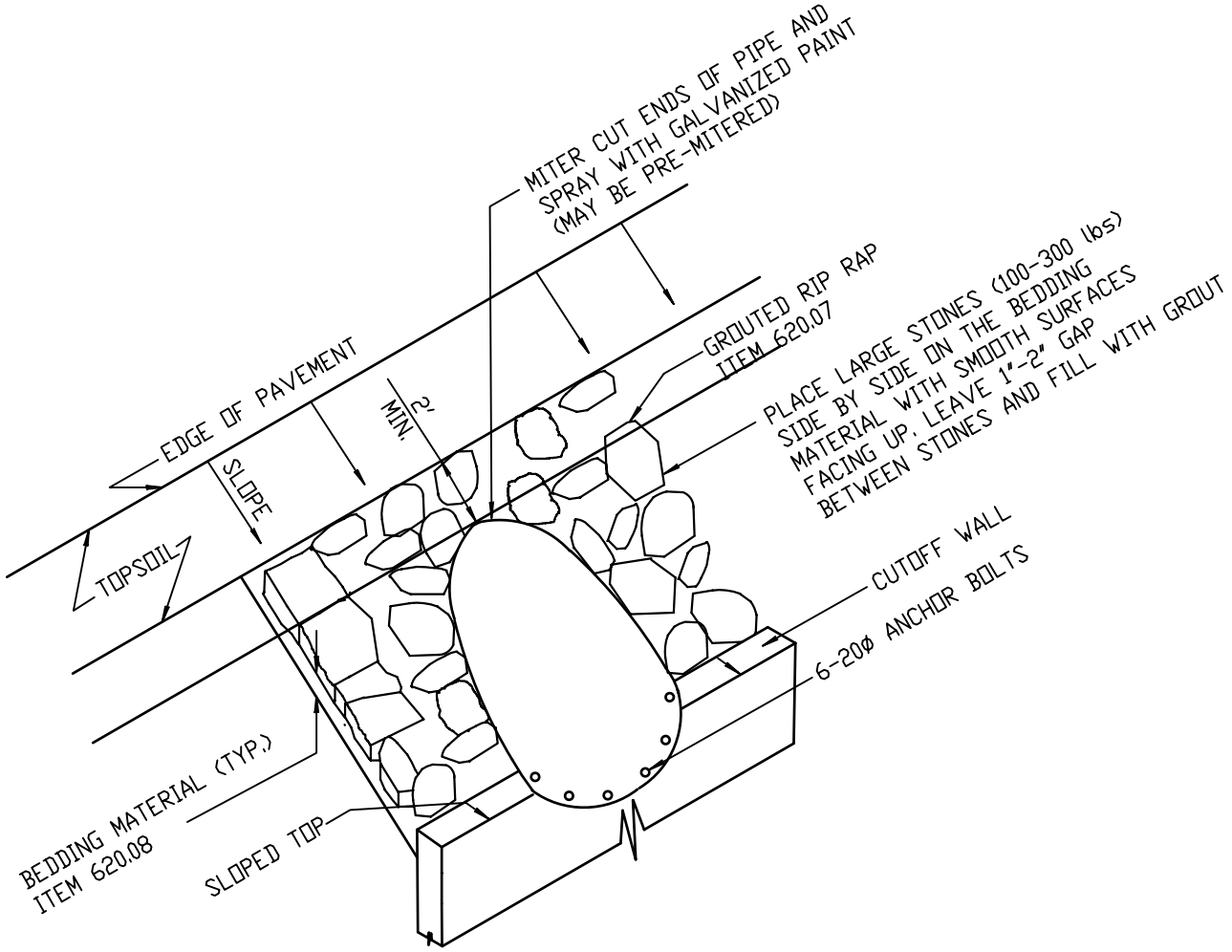

RIP-RAP DETAIL AT CROSS CULVERT ENDS

NOT TO SCALE

3/1/06

REVISED