REVISED 3/1/06

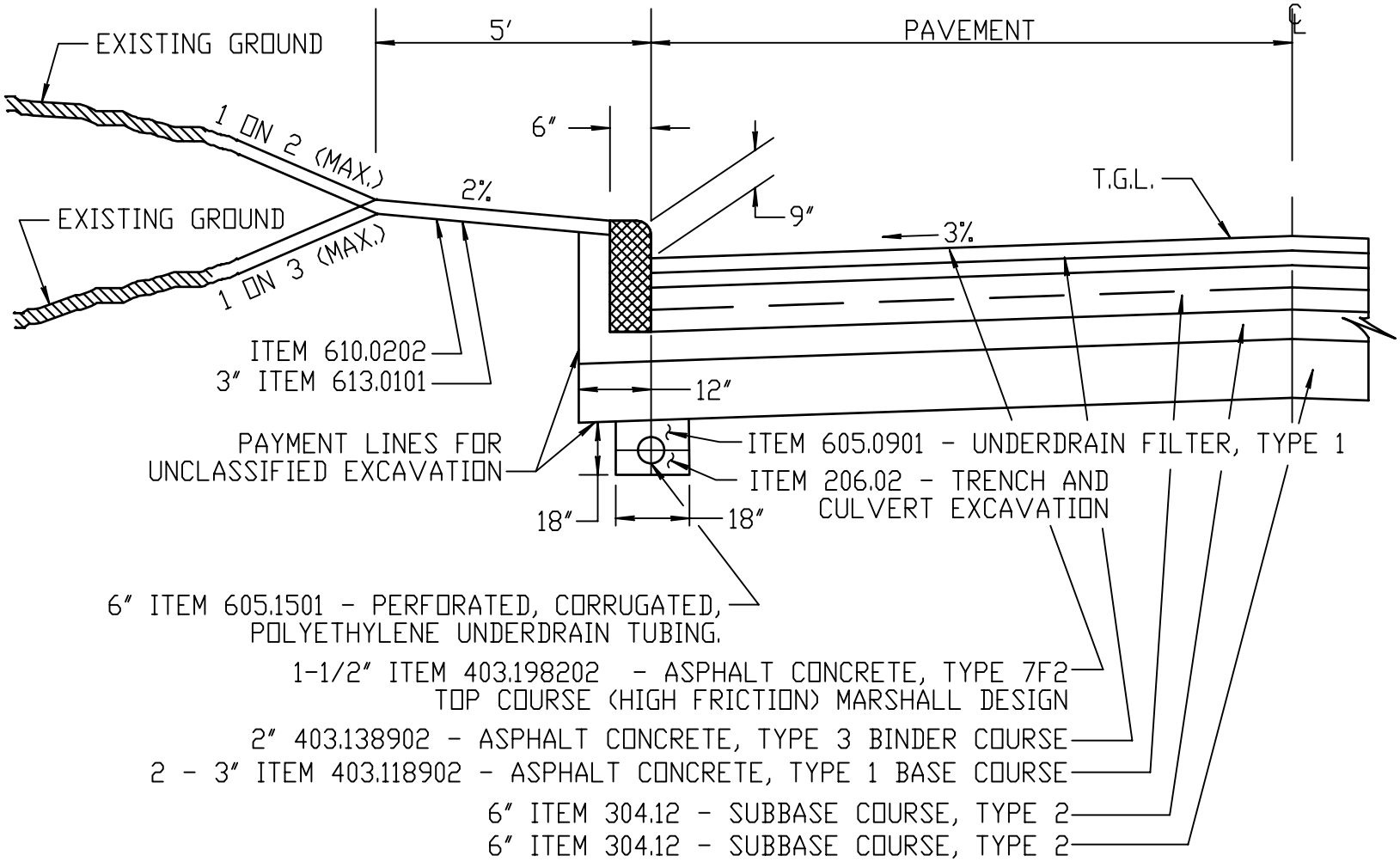

TYPICAL SECTION WITH CURBS

NOT TO SCALE