NOTE:

IF THERE IS ANY QUESTIONS REGARDING THE FINAL, ACCEPTABLE LOCATION FOR A SIGN SLEEVE, PLEASE CALL MONROE COUNTY DOT AT 753-7750 AND REQUEST ASSISTANCE.

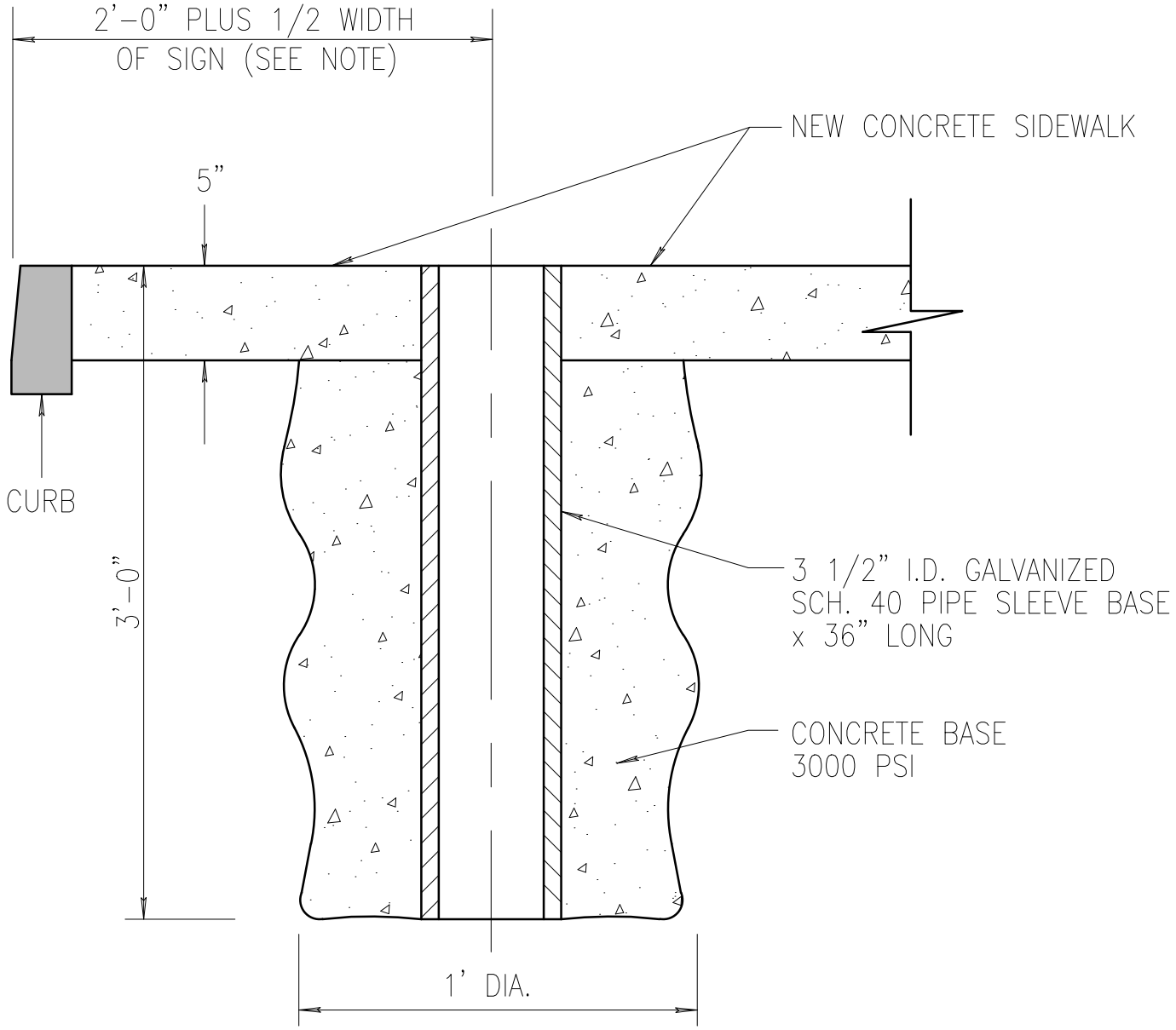

SIGN POST SLEEVE BASE INSTALLATION

NOT TO SCALE

12/19/13

REVISED