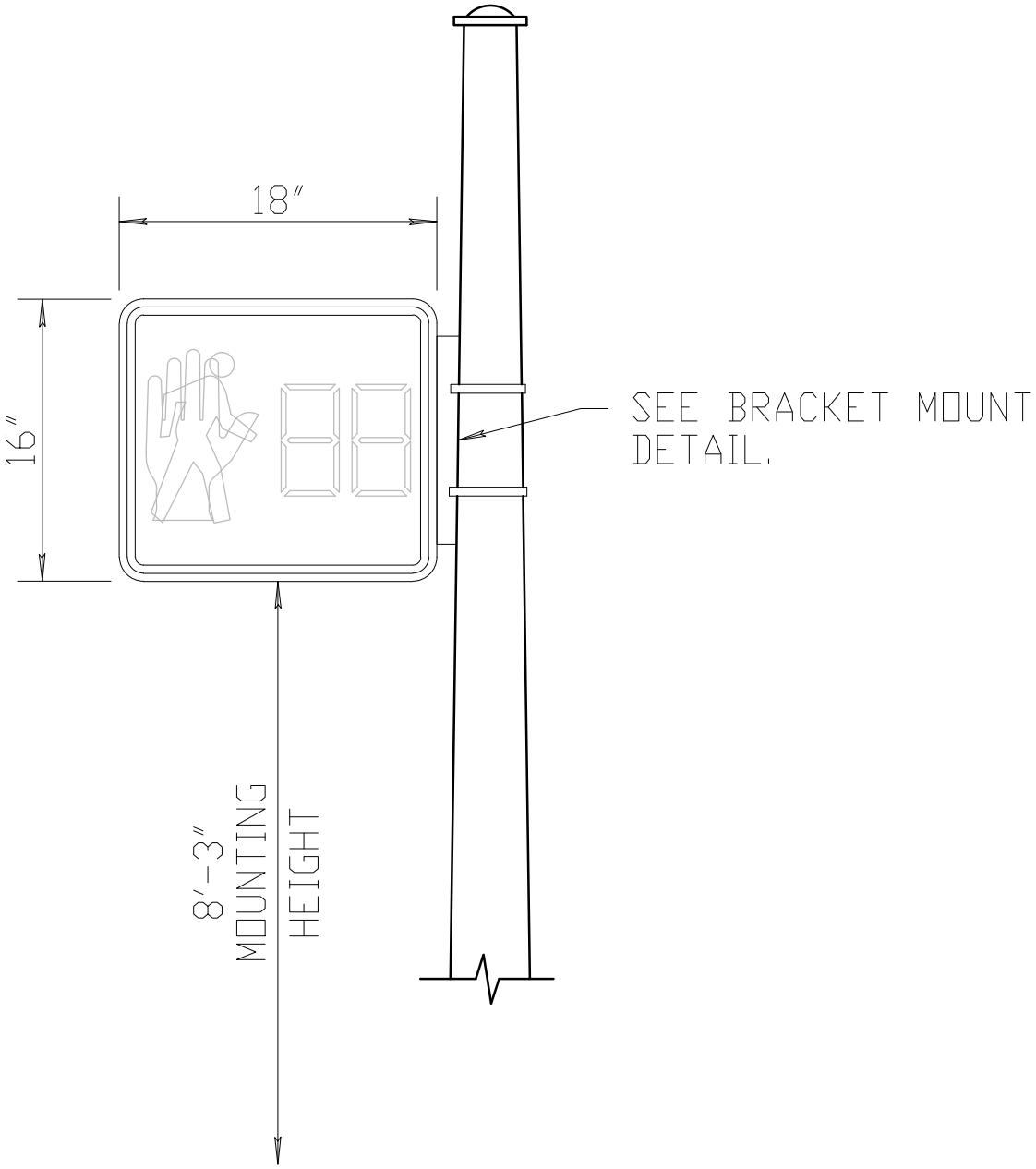

NOTES:

1. POLE RIGHT MOUNT AT 90° SHOWN

CLAMSHELL PEDESTRIAN SIGNAL

NOT TO SCALE

3/3/15

REVISED