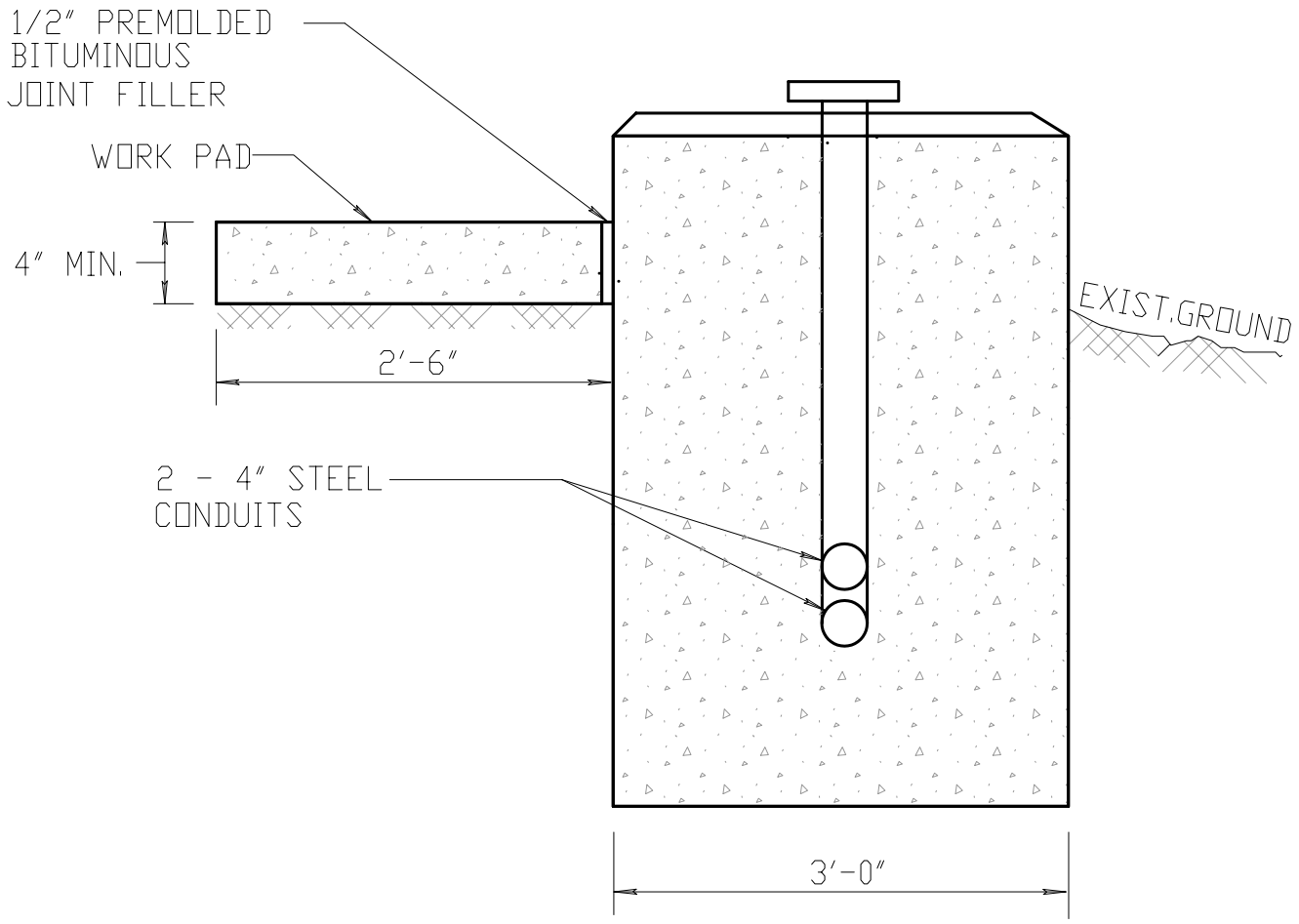

CONCRETE BASE FOR CONTROLLER - VIEW A

NOT TO SCALE

4/1/98

REVISED