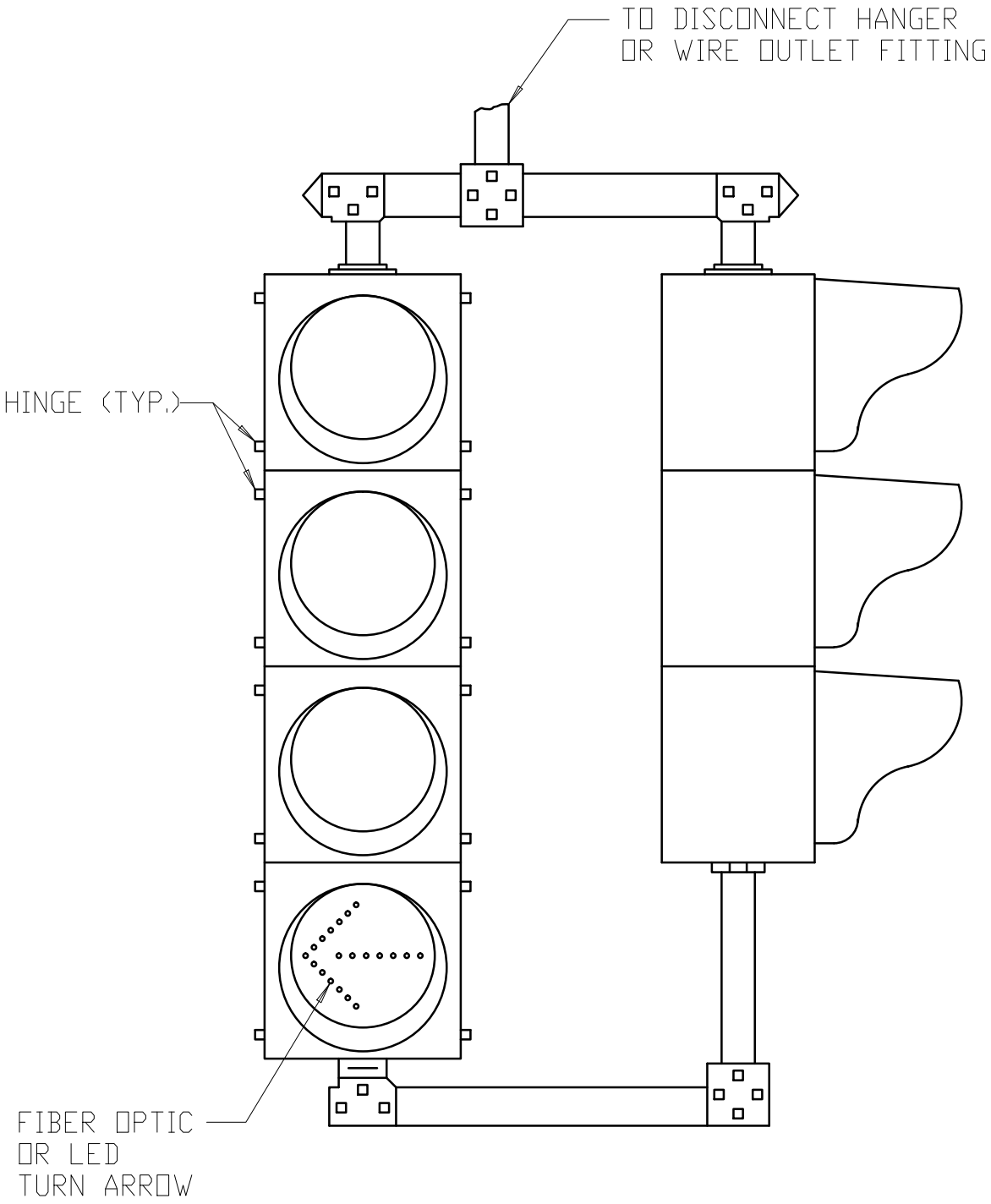

FOUR SECTION SIGNAL FACE

NOT TO SCALE

7/16/13

REVISED