REVISED 6/10/13

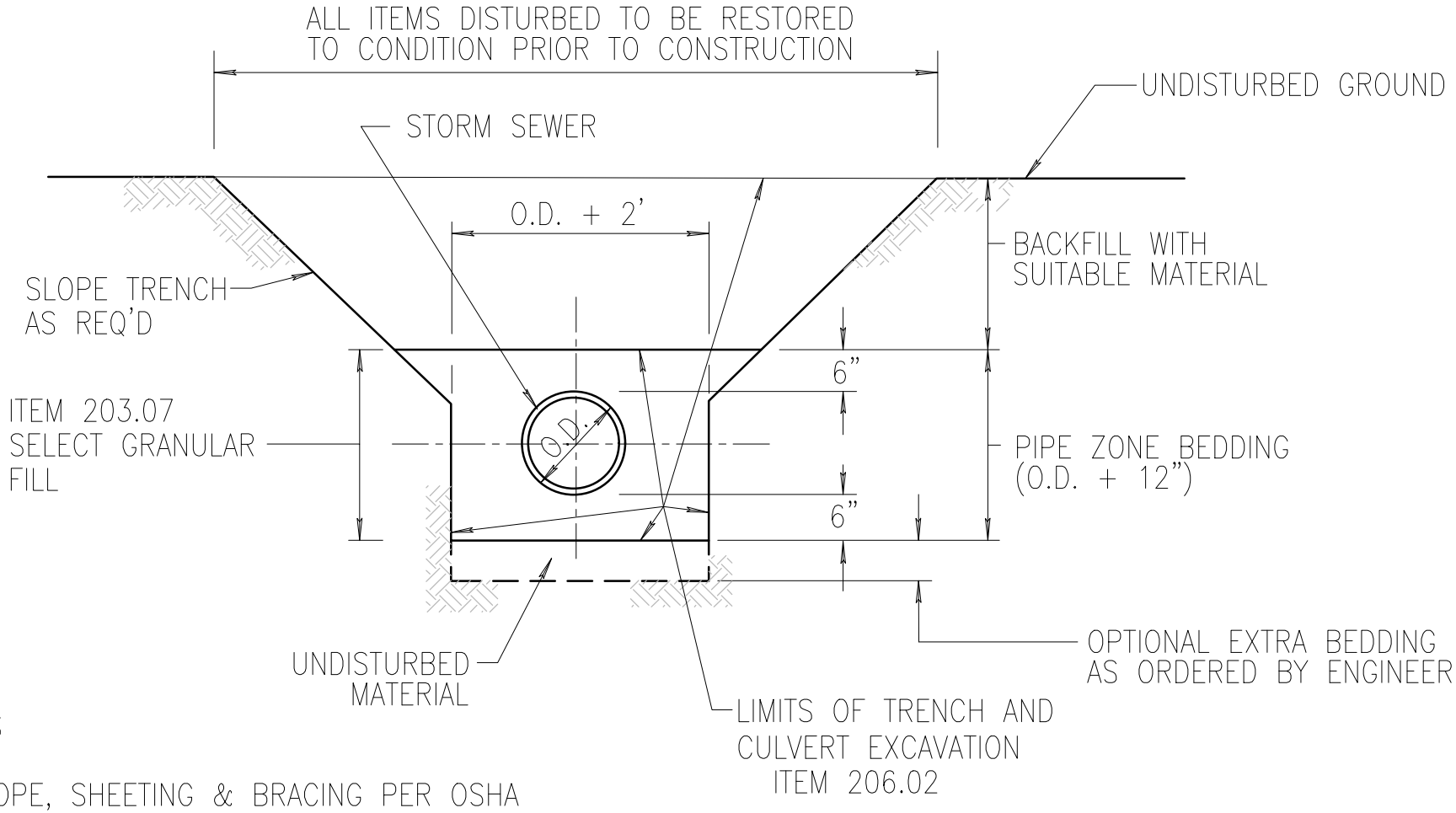

NOTES

1. SLOPE, SHEETING & BRACING PER OSHA SPECIFICATIONS. TRENCH SHIELD OR SHEETING TO BE LIFTED ABOVE THE SPRING LINE.

2. WHERE STORM SEWER CROSSES PREVIOUSLY INSTALLED SANITARY SEWER, WATER OR GAS MAIN, ETC. TRENCH SHALL BE EXCAVATED DOWN TO THE PREVIOUSLY LAID UTILTY AND BACKFILLED WITH #2 CRUSHED STONE COMPACTED IN 6" LIFTS TO INSURE ADEQUATE SUPPORT.

3. 6" STONE BEDDING, CONSISTING OF A BLENDING OF #1 AND #2 STONE, IS REQUIRED FOR SANITARY AND STORM SEWER INSTALLATIONS WITH CRUSHED STONE HAUNCHING TO A MINIMUM OF ONE-HALF OF THE PIPE DIAMETER ON THE SIDE OF THE PIPE. PAYMENT TO BE INCLUDED UNDER ITEM 203.07 SELECT GRANULAR FILL.

STORM SEWER TRENCH IN GRASS AREA

NOT TO SCALE