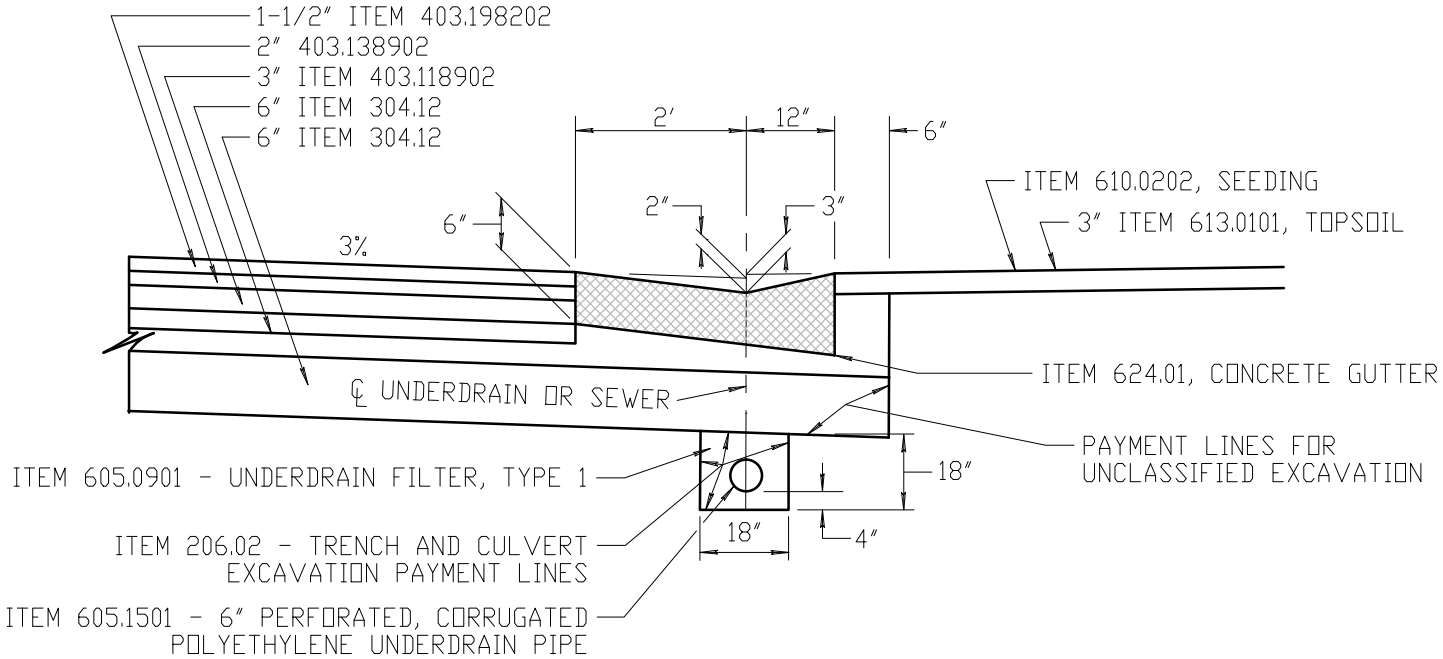

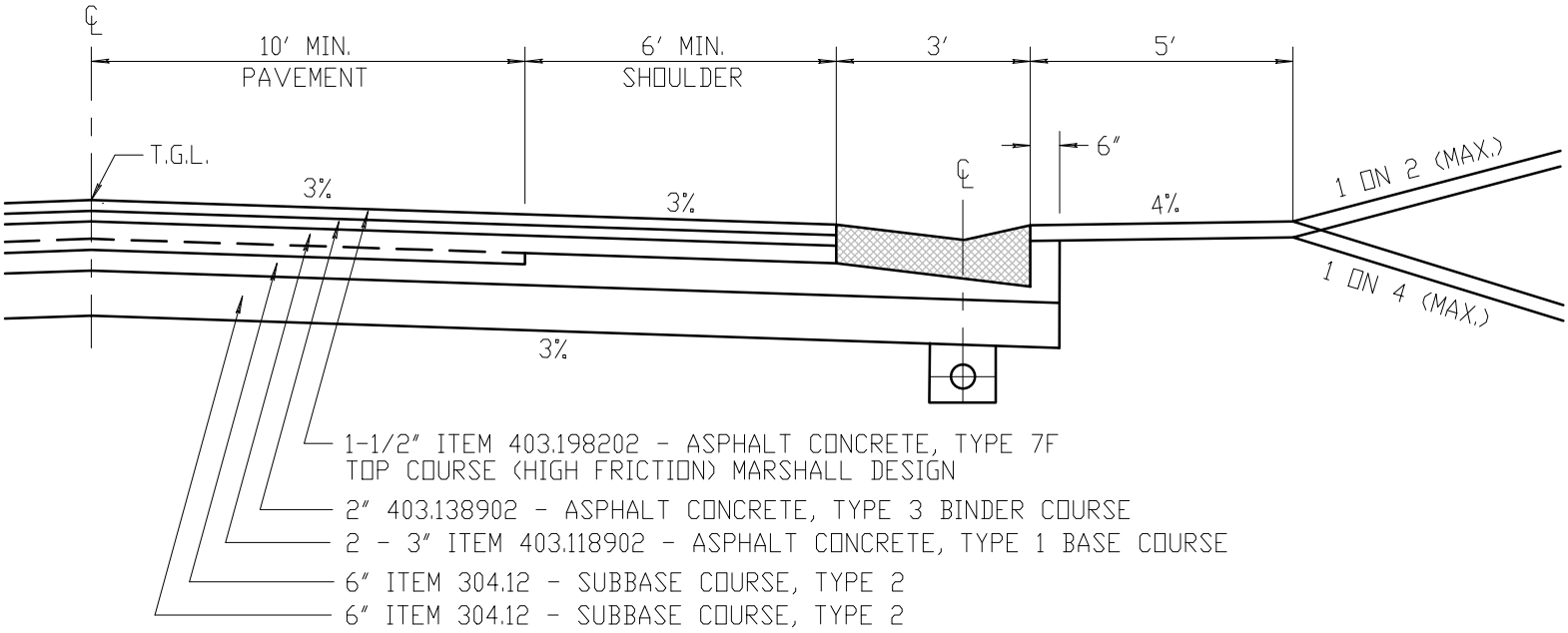

TYPICAL SECTION WITH GUTTER AND UNDERDRAIN

NOT TO SCALE

2/11/15

REVISED