REVISED

4/27/11

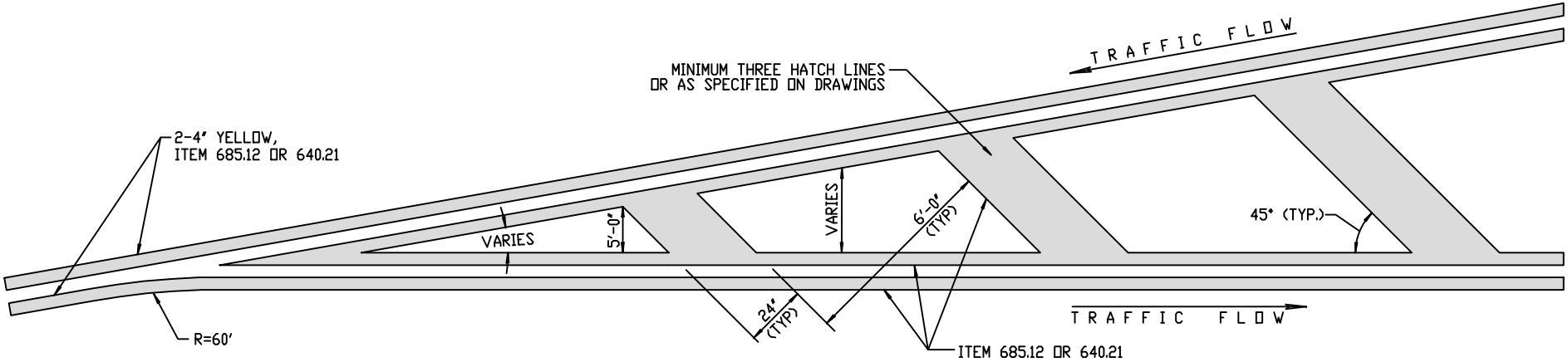

BEGINNING OF MEDIANS-STRIPING TREATMENT

NOT TO SCALE