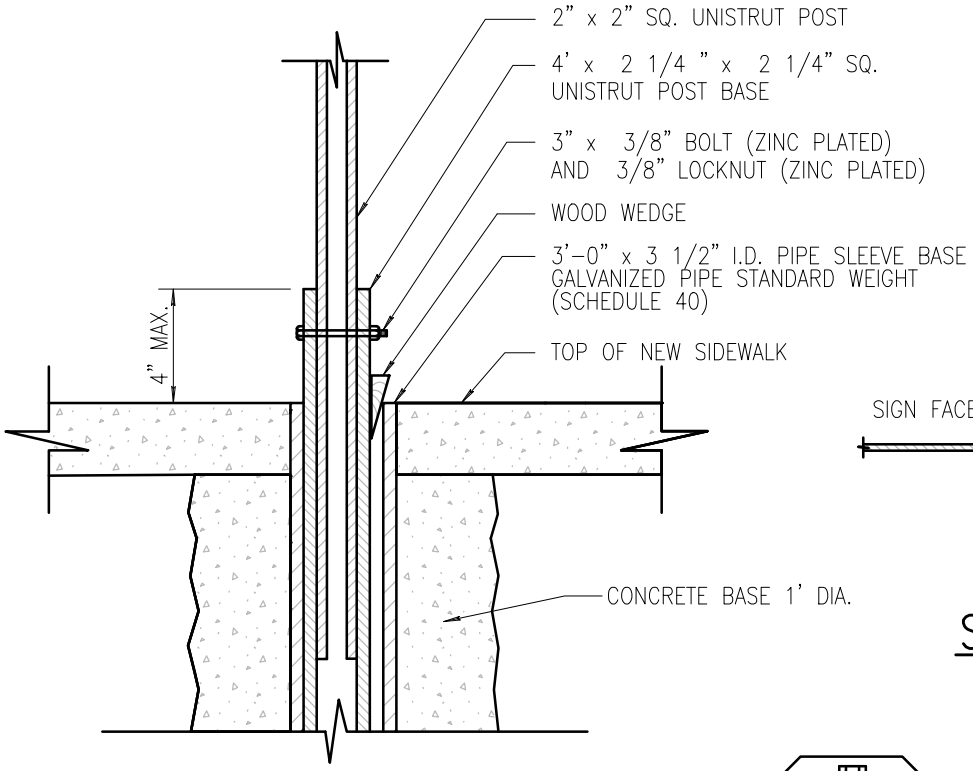


## SECTION B – B

**NOT TO SCALE**

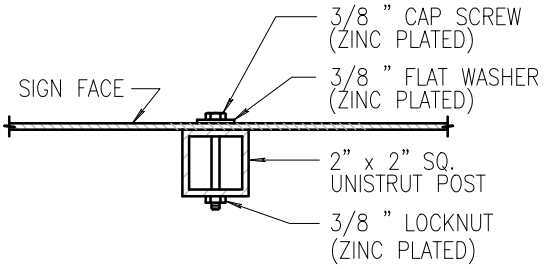


## SECTION A – A

**NOT TO SCALE**

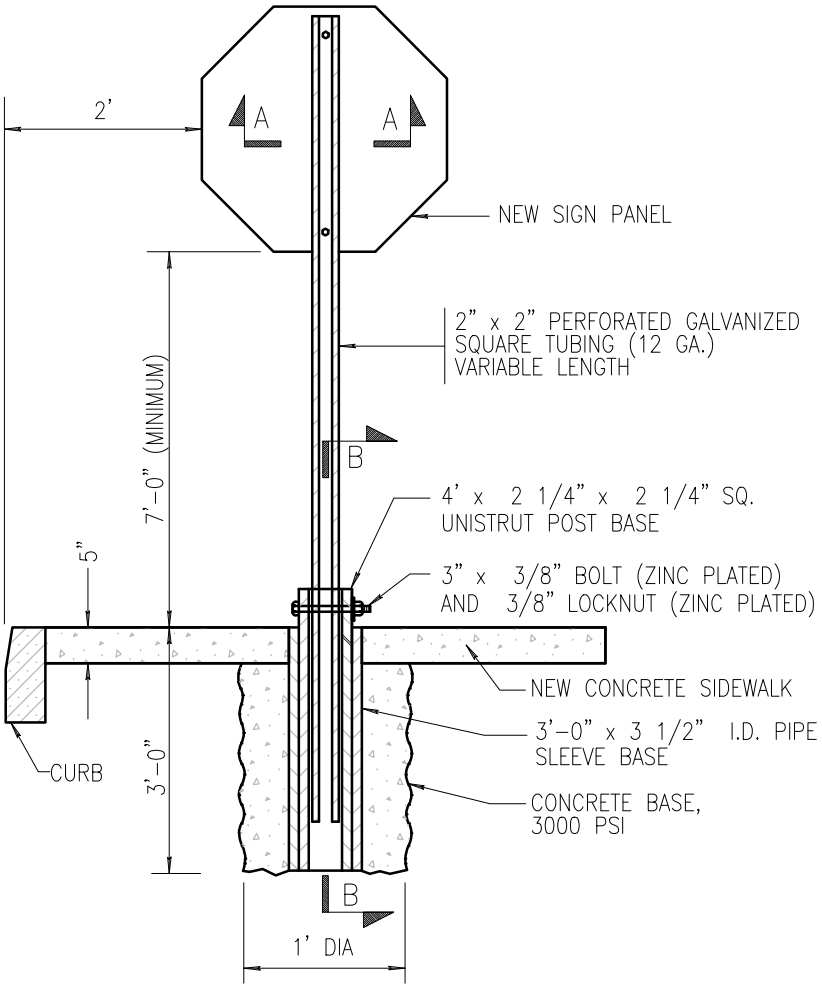


## POST MOUNTED SIGN INSTALLATION IN CONCRETE

**NOT TO SCALE**

12/19/13

REVISED