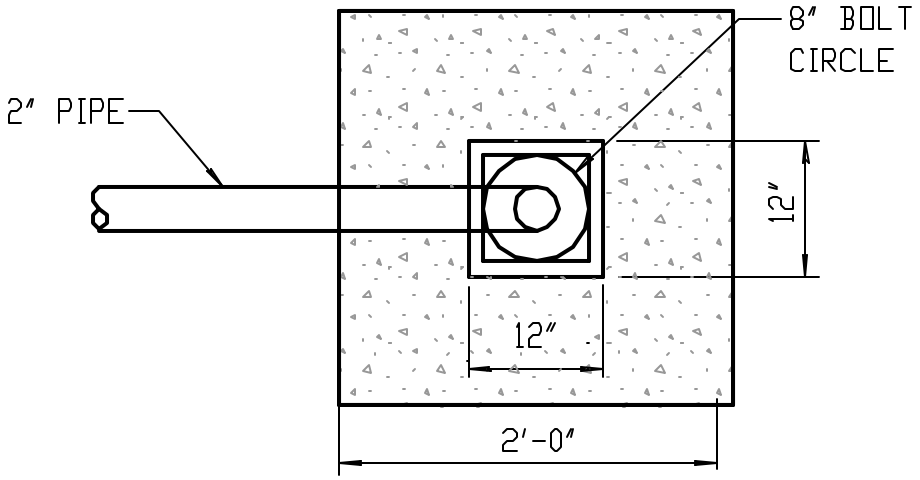

TOP VIEW

CONCRETE BASE FOR PEDESTRIAN SIGNAL POLE

NOT TO SCALE

4/1/98

REVISED